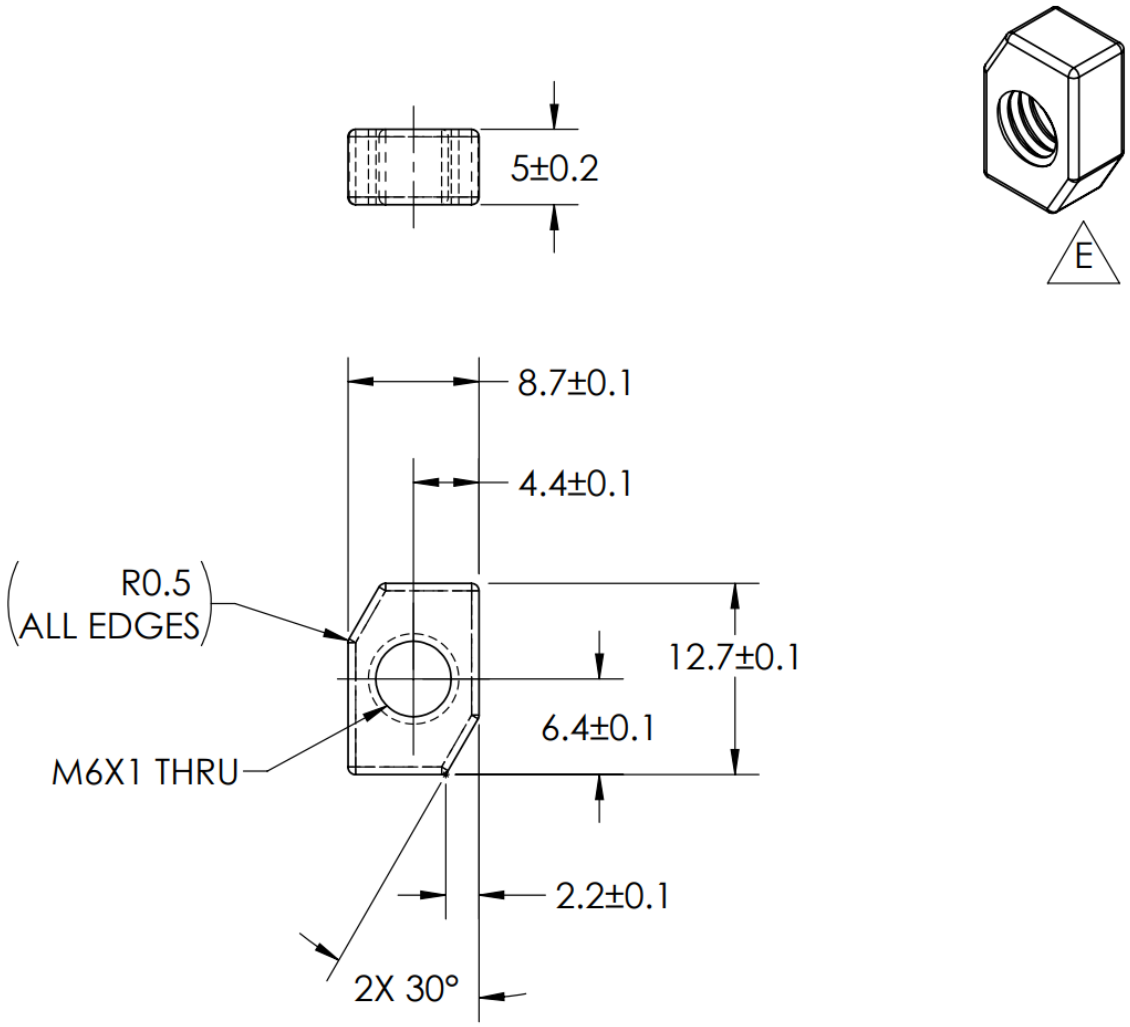

METRIC

NOTES:
1. MATERIAL: MILD STEEL, PROPERTY CLASS 8.
2. REMOVE BURRS AND SHARP EDGES.
3. FINISH: ZINC PLATE, CLEAR PER SPEC.

PART NO. 89122255	E	MODEL CHGS FOR ASSY; ADDED MFG RAD ON ALL EDGES	ECO-175274	6/1/16	HDL	---
MATERIAL SEE NOTES	REV.	DESCRIPTION	ECO/PDP	DATE	BY	ENG
FINISH SEE NOTES						

TOLERANCE UNLESS NOTED
ZERO PLACE X ± 2.5
ONE PLACE .X ± 0.8
TWO PLACE .XX ± 0.38
HOLE DIA ± 0.13
ANGLES ± 2°

SCALE	NONE
DRAWN	HDL
CHECKED	---
APPROVED	---
DATE	4/22/15

TITLE
NUT, RECT; M6X1

SolidWorks Drawing

THIRD ANGLE PROJECTION

DO NOT SCALE DRAWING

SIZE **A** | DRAWING NO. 89122255 | SHEET 1 OF 1